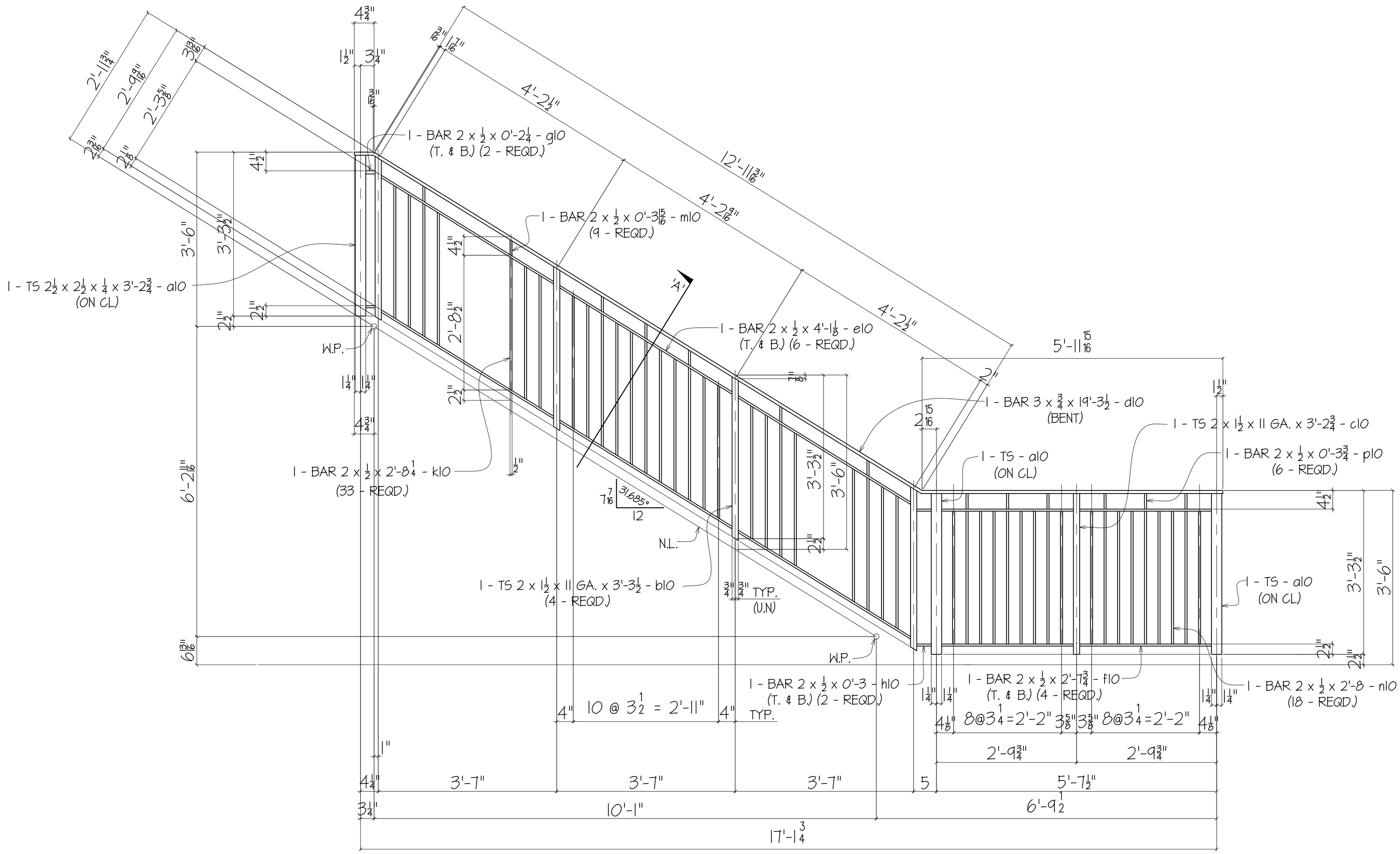

2 - THUS - 10R1

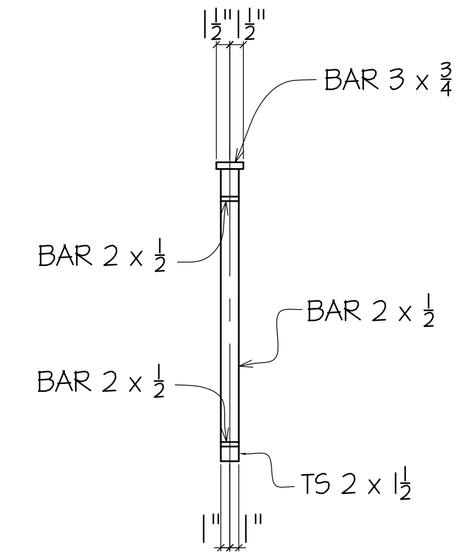

SECTION - "A"

RELEASED FOR
APPROVAL ONLY
Not for Fabricaiton

(REF. E1, E2 & E3)

FIELD BOLTS THIS SHEET
-

NOTE:

1. WELD AND GRIND SMOOTH ALL JOINTS.

BACK CHARGES FOR FIELD CORRECTIONS WILL NOT BE ACCEPTED WITHOUT PRIOR NOTIFICATION.

Steel Designs, Inc. 13303 EMMETT HOUSTON, TX 77041 713/937-3006 FAX # 713/937-9086

ARCHITECT'S REF. SHEET	PRINTS ISSUED				
	NO.	FOR	DATE	PROJECT	ST. JOHN'S SCHOOL
		APPVL			HOUSTON, TEXAS
PAINT- ONE SHOP COAT				SUBJECT	STAIR # 1 RAIL
TNEMEC #10-99 PRIMER					
REVISIONS				CONTRACTOR	W.S. BELLOWS CONSTRUCTION
1				ARCHITECT	ZIEGLER COOPER
2				DRN. BY: RS	DATE: 7/04 CHKD. BY: + DATE: *
3				HOLES -	UNLESS NOTED
4				JOB NO. 0433	ITEM 1 DRG. 10 OF
ERECTION ☐ YES ☐ NO	DWG. APPR'D.				

(C) RLS Graphics 2004 7/15/2004 6:14 PM 0433-S010-A1-R0.dwg