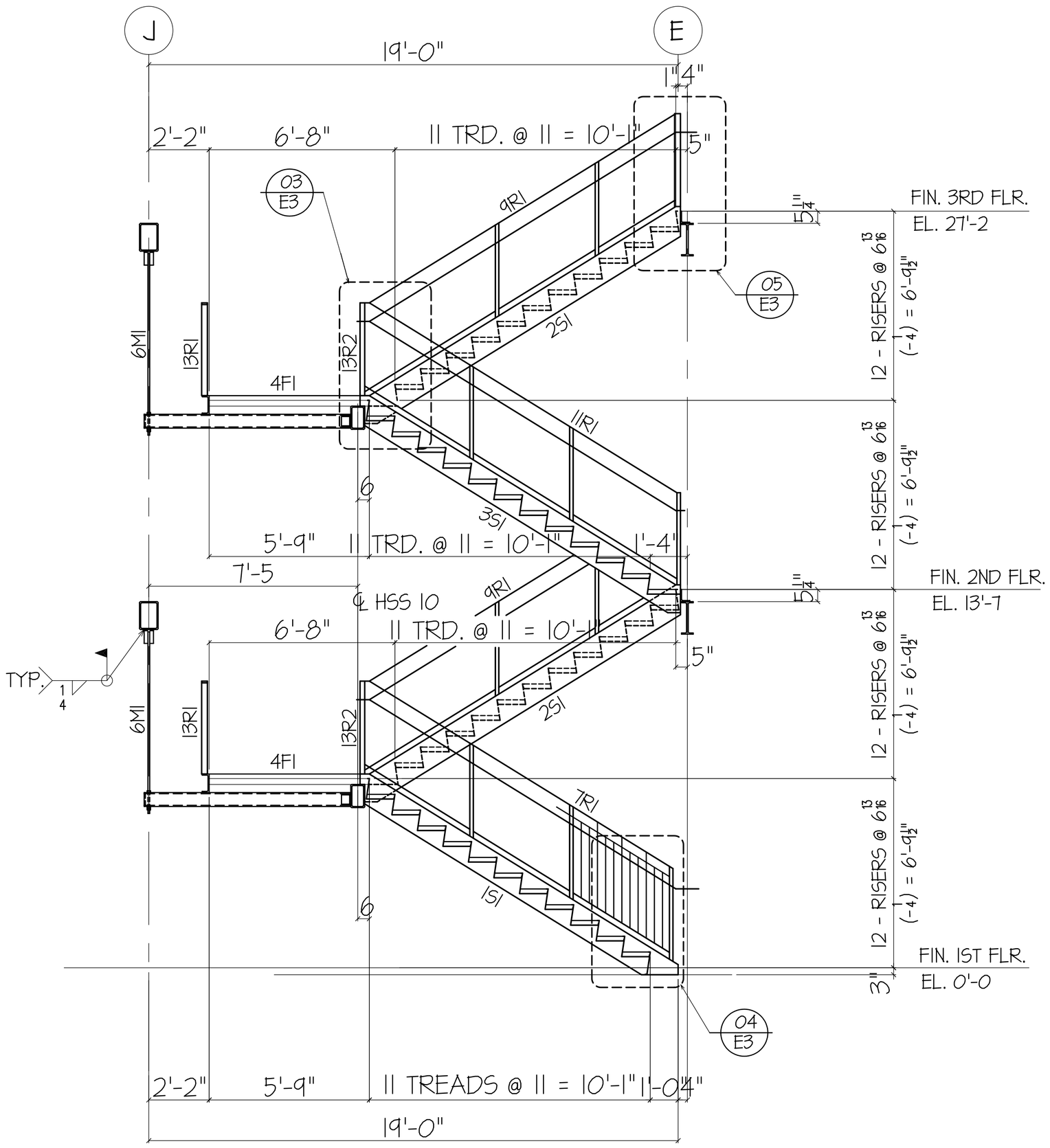

SECTION 01

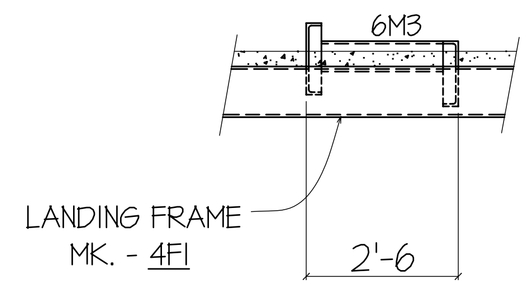

SECTION 02

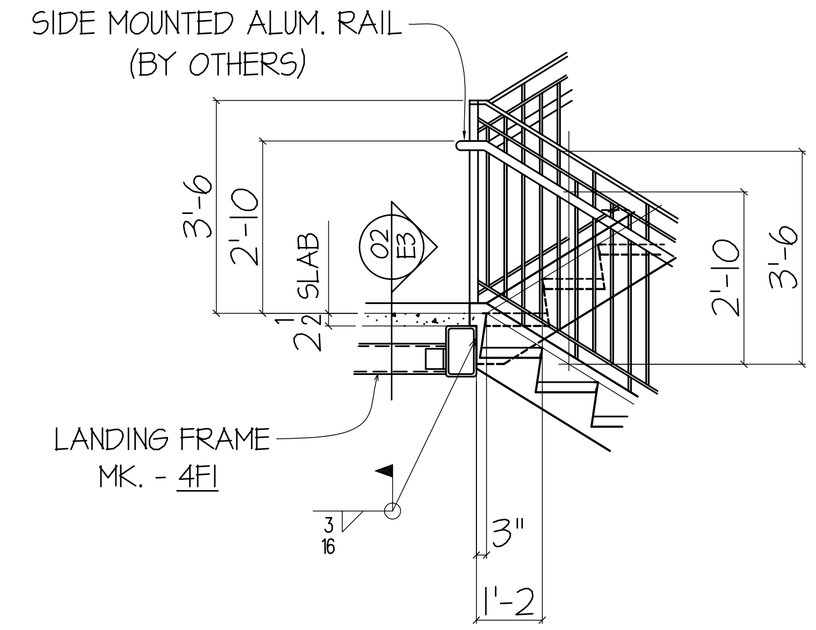

DETAIL 03
(REF: 04/A9.6)

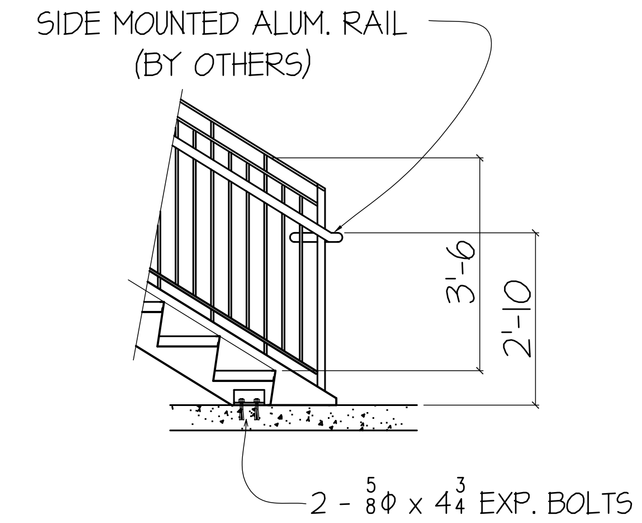

DETAIL 04
(REF: 02/A9.6)

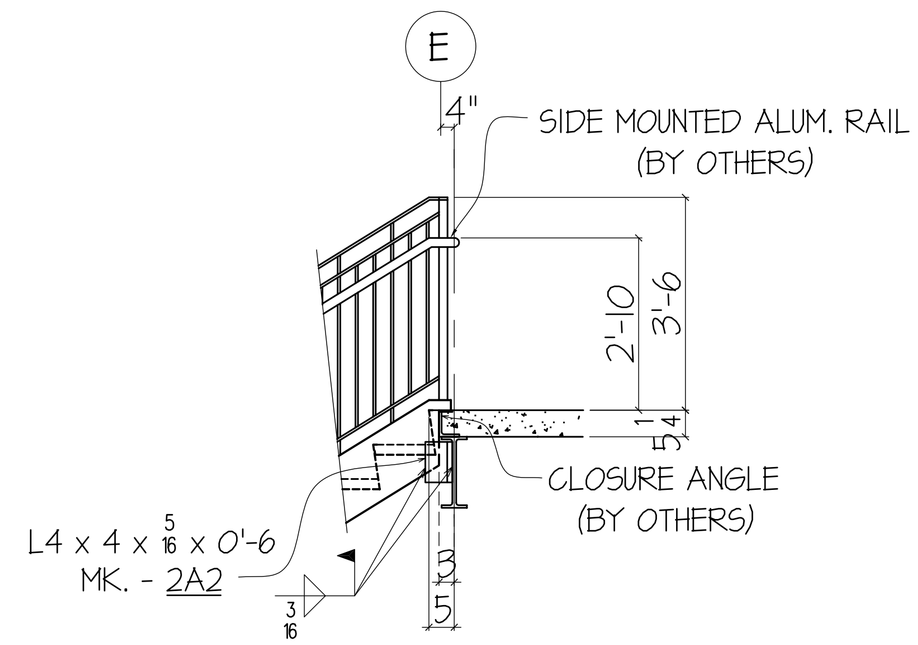

DETAIL 05
(REF: 01/A9.6)

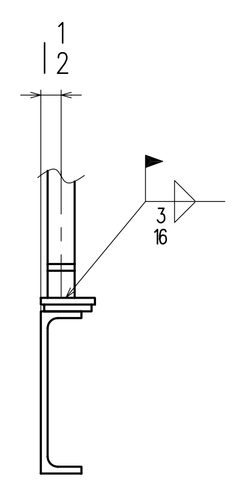

TYP. RAIL TO STRINGER DETAIL

NOTES:

1. ALL STRINGERS SHALL BE C12 x 20.7 (U.N.)
2. ALL TREAD PANS SHALL BE PL 12GA.
3. ALL LANDING PANS SHALL BE PL 10GA.
4. WELD ALL JOINTS CONTINUOUS AND GRIND SMOOTH TO ARCHT'L FINISH ALL EXPOSED WELDS.

RELEASED FOR
FABRICATION

BACK CHARGES FOR FIELD CORRECTIONS WILL NOT BE ACCEPTED WITHOUT PRIOR NOTIFICATION.

Steel Designs, Inc.
13303 EMMETT HOUSTON, TX 77041
713/937-3006
FAX # 713/937-9086

ARCHITECT'S REF. SHEET	PRINTS ISSUED		
A9.3, A9.6	NO.	FOR	DATE
		APPVL	
PAINT- ONE SHOP COAT			

REVISIONS	
1	
2	
3	
4	
ERECTION ☐ YES ☐ NO	DWG. APPR'D.

PROJECT	ST. JOHN'S SCHOOL HOUSTON, TEXAS
SUBJECT	STAIR # 1 ELEVATION AND SECTIONS
CONTRACTOR	W.S. BELLOWS CONSTRUCTION
ARCHITECT	ZIEGLER COOPER

DRN. BY:	DATE:	CHKD. BY:	DATE:
RS	6/04	MLS	8/26/04

HOLES UNLESS NOTED

JOB NO.	ITEM	DRG.
0433		E3 OF

(C) RLS Graphics 20048/25/2004 7:01 PM0433-E003-F1-R0.dwg